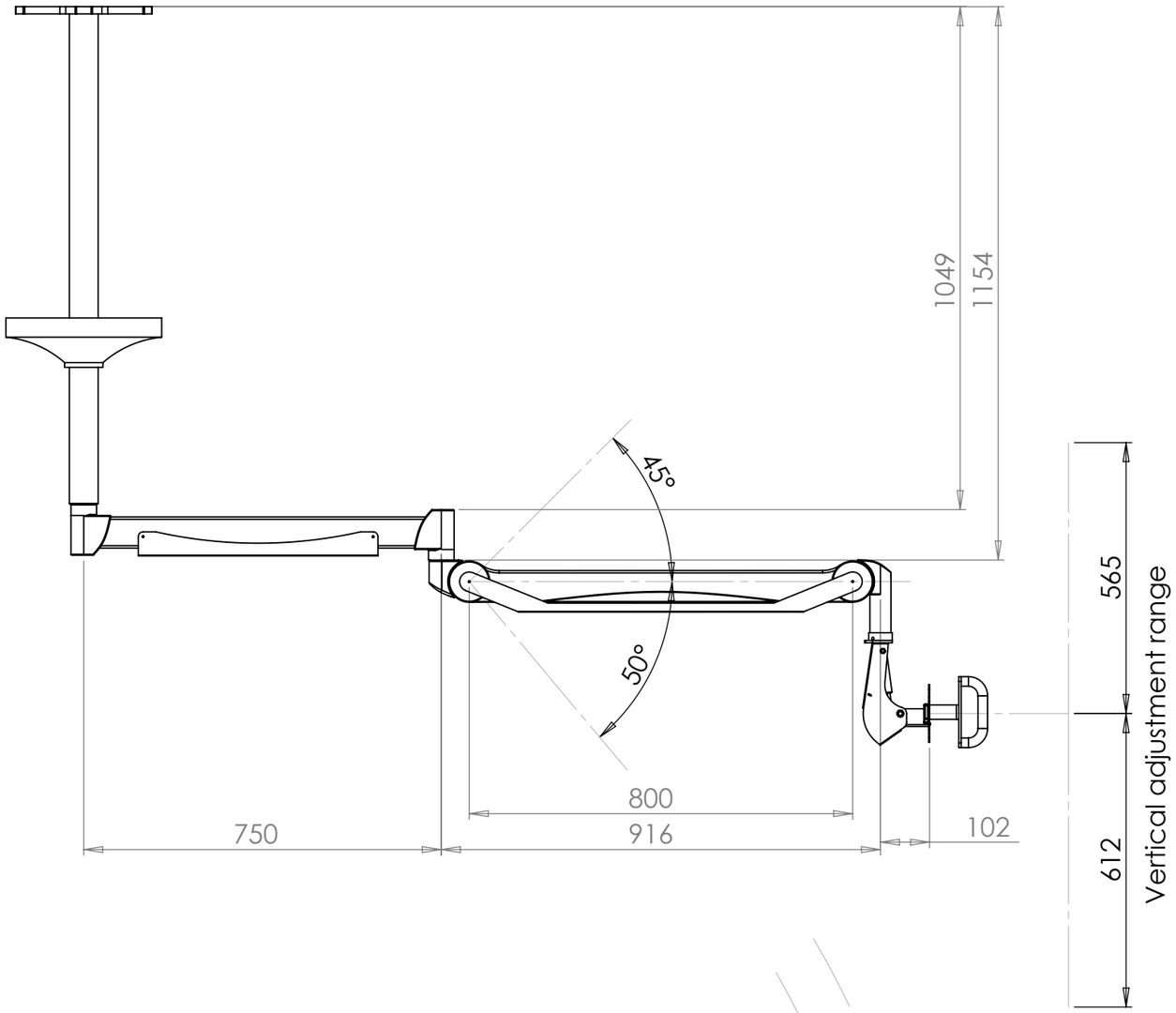

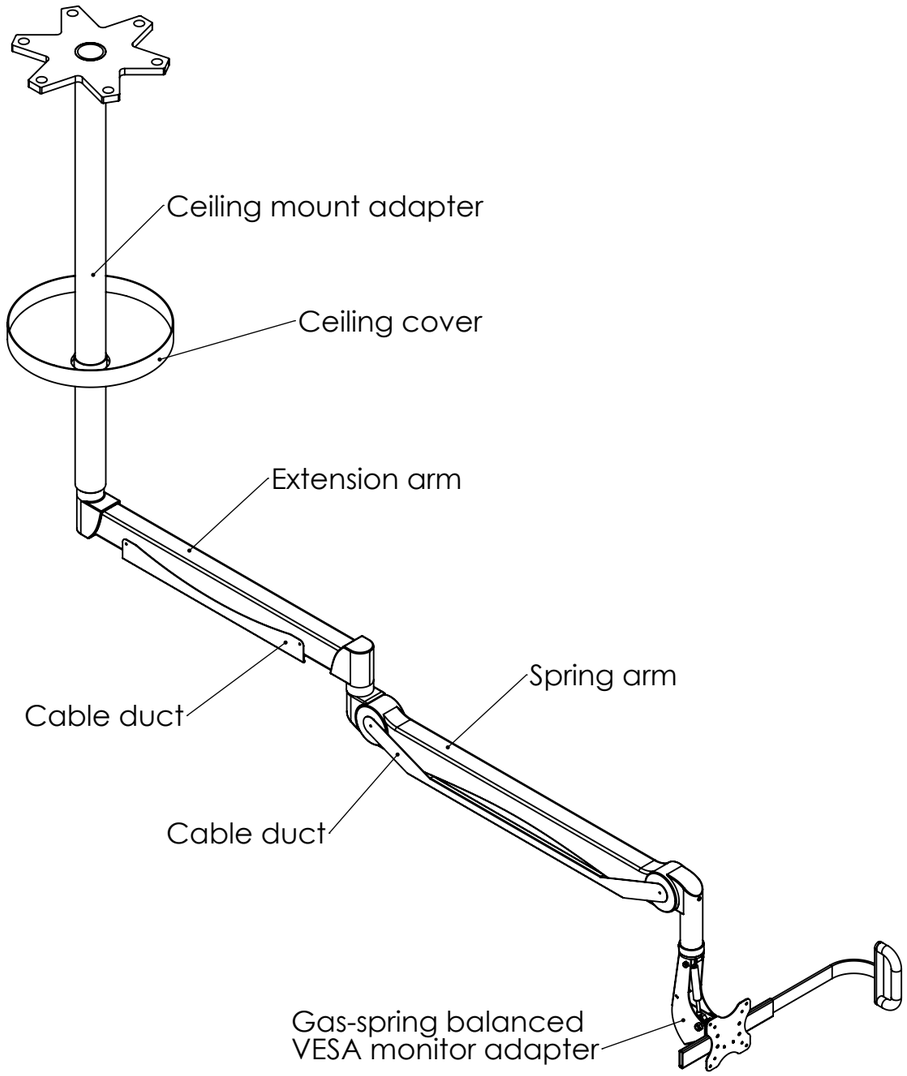

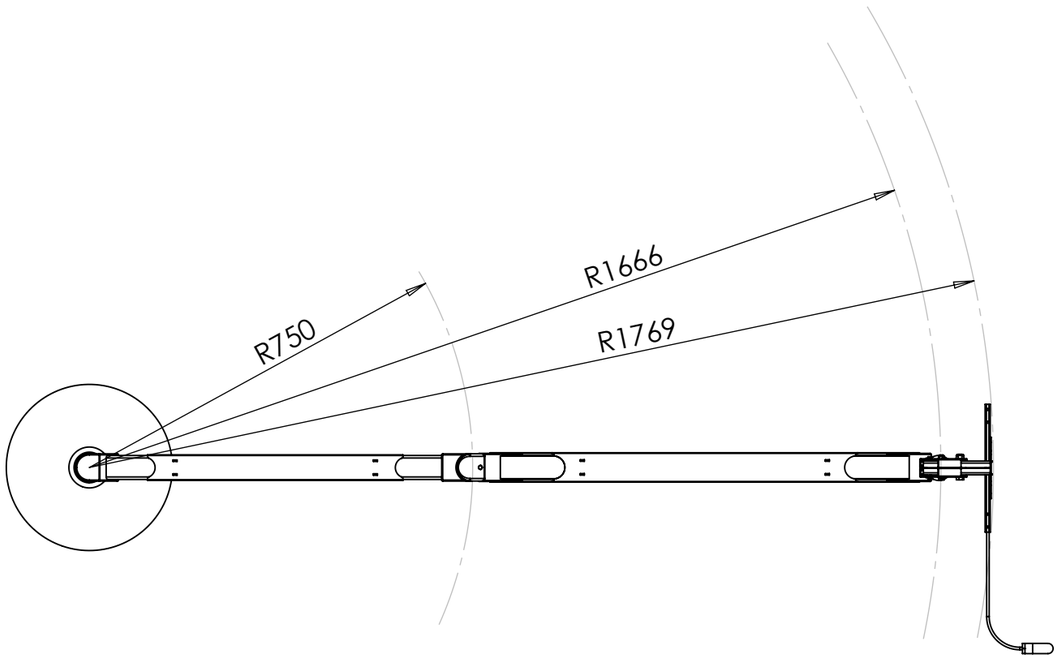

0	22-12-2011	RHA	Initail	Concept	
Revion	Date	Drawn	Discription	Status	Par.

JANSEN MEDICARS

Contact person: R. Haandrikman | Scale: 1:12 | Costomer:

Project: | Dimensions: mm

www.medicars.com
Tel: +31-(0)30-2613500

DWG NO. / Title:
Ceiling mount monitor arm

A3